OSBORNE BIG WHEEL® RF1 SERIES
FINISH CONFINEMENT FEEDER
PARTS LIST

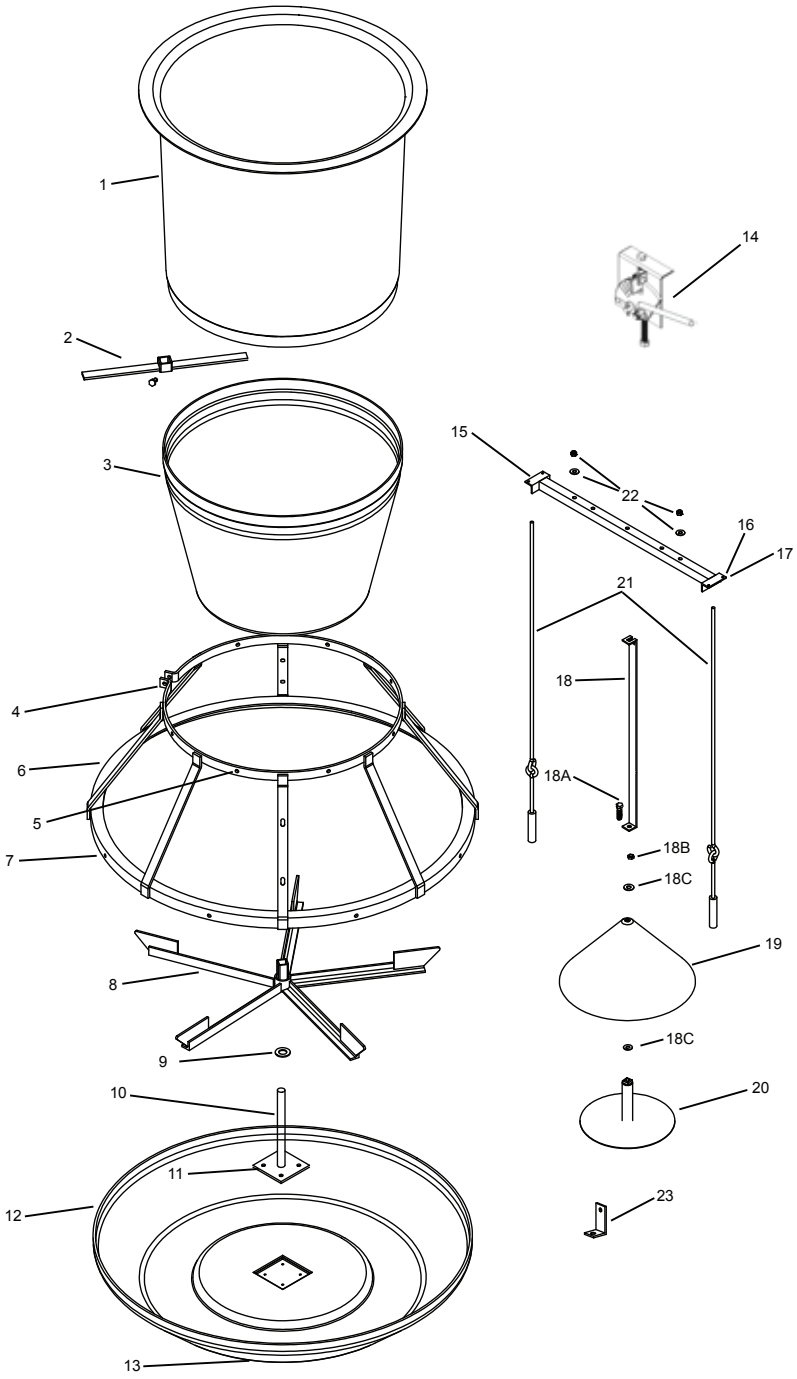

Osborne Big Wheel® RF1 Round Finish Feeder - 7.5 bu.		
Item #	**Part #**	**Description**
1	KF-F10002	Hopper top
2	KF-F10007 or KF-F1ZP01 or KF-F1S003	Feed sweep with set screw Feed sweep with set screw (zinc plated) Feed sweep with set screw (stainless steel)
3	KF-F10001	Hopper bottom
4	INCLUDED IN BOLT KIT	5/16 x 2-in. cage tightener bolt 5/16-in. hex cage tightener nut 5/16-in. cage tightener jam nut
5	INCLUDED IN BOLT KIT	5/16 x 7/8-in. cage divider bolts (7 ea.) 5/16-in. cage divider nuts (7 ea.)
6	KF-F10005 or KF-F1G001 or KF-F1S001	Cage divider Cage divider (galvanized) Cage divider (stainless steel)
7	INCLUDED IN BOLT KIT	5/16 x 7/8-in. cage divider bolts (8 ea.) 5/16-in. cage divider nuts (8 ea.)
8	KF-F10006 or KF-F1G002 or KF-F1S002	Feed wheel Feed wheel (galvanized) Feed wheel (stainless steel)
9	IN BOLT KIT	3/4-in. feed wheel washer
10	KF-F10008 or KF-F1ZP02 or KF-F1S004	Axle assembly Axle assembly (zinc plated) Axle assembly (stainless steel)
11	IN BOLT KIT	10-24 flat-head machine screws (4 ea.)
12	KF-F10003	Trough
13	IN BOLT KIT	10-24 flange nuts (4 ea.)
14	KF-F10022	Feed delivery adjustment mechanism
15	KF-F10011 or KF-F1ZP04	Crossbar Crossbar (zinc plated)
16	IN BOLT KIT	10-24 round-head machine screws (4 ea.)
17	IN BOLT KIT	10-24 crossbar nuts (4 ea.)
18	KF-F10015 or KF-F1ZP05	Cone strap Cone strap (zinc plated)
18A 18B 18C	INCLUDED IN BOLT KIT	3/8 x 1 1/2-in. bolt 3/8-in. jam hex nut 5/16-in. washer (2 ea.)
19	KF-F10004	Cone
20	KF-F10009 or KF-F1ZP03	Cone support Cone support (zinc plated)
21	FF-00RF1B or FF-00RF1BZP	Bump bar agitator (2 ea.) Bump bar agitator (zinc plated; 2 ea.)
22	RFN-2400 RFW-2000	Bump bar lock nut (2 ea.) Bump bar washer (2 ea.)
23	FF-00RF1E	Anchor bracket (order separately)

Replacement Bolt Kits	
KF-F10012	Bolt kit (includes trough divider bolt kit)
KF-F10013	Trough divider bolt kit
KF-F1S005	Bolt kit (includes trough divider bolt kit; stainless steel)
KF-F1S006	Trough divider bolt kit (stainless steel)

Additional accessories, like hopper lids and multiple options in fenceline adapters, are available from Osborne, ordered separately.
Request the Big Wheel Feeder Assembly Video from Osborne Customer Service by phone or e-mail!

QC SUPPLY®

NORTH ON HIGHWAY 15
574 ROAD 11
SCHUYLER, NE 68661
402.352.3707

Printed in the U.S.A.

www.QCSUPPLY.com