A Marley Engineered Products Brand

WHT SERIES
ELECTRIC UTILITY HEATER

- 500 WATT OUTPUT
- AT 240V OR 120V
- RUGGED CONSTRUCTION BUILT-IN FREEZE PROTECTION RANGE THERMOSTAT
- RUGGED CONSTRUCTION

APPLICATIONS

With Berko's electric utility heater, you can quit worrying about costly troublesome freeze-ups. Install it anywhere heat is needed to prevent pipes, pumps, and other water, hydraulic fluids or oil-filled equipment from freezing. You'll find the WHT-500 ideal to heat any small confined area such as suburban and farm home pump houses, well pits, ski lift booths, relay stations, construction sheds, toll booths, ticket booths and as an oil preheater in boiler rooms. It is always on guard when you can't be.

It is designed to provide to automatic, 24-hour protection. Set the thermostat at any desired level and leave it. There are no moving parts it is maintenance free, and can be left unattended all winter long - ideal for remote locations.

FEATURES

STURDY CONSTRUCTIONS. The heater's cabinet encloses the element and consists of epoxy painted galvanized steel for protection. All power supply and control box - no live voltage in the element area.

DUAL VOLTAGE ELEMENT. A steel sheath, aluminum finned element provides fast heat dissipation and a long life because of cooler sheath temperatures. The unit can be connected to 240V/208V or 120V supply.

EASY TO INSTALL. The WHT-500 is designed for fast, easy installation in hard to reach places. Mounting holes are provided in the back of the unit. The control box has a pre-punched service entrance for 1/2" conduit or nonmetallic sheathed cable fittings, and is prewired for easy field connections. A positive ground clip is also provided.

BUILT-IN THERMOSTAT. The durable thermostat is completely contained within the control box. Temperature control range is 40˚ to 70˚ F.

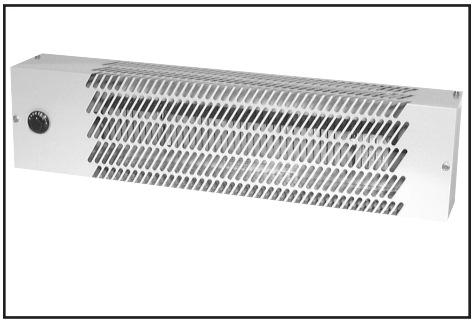

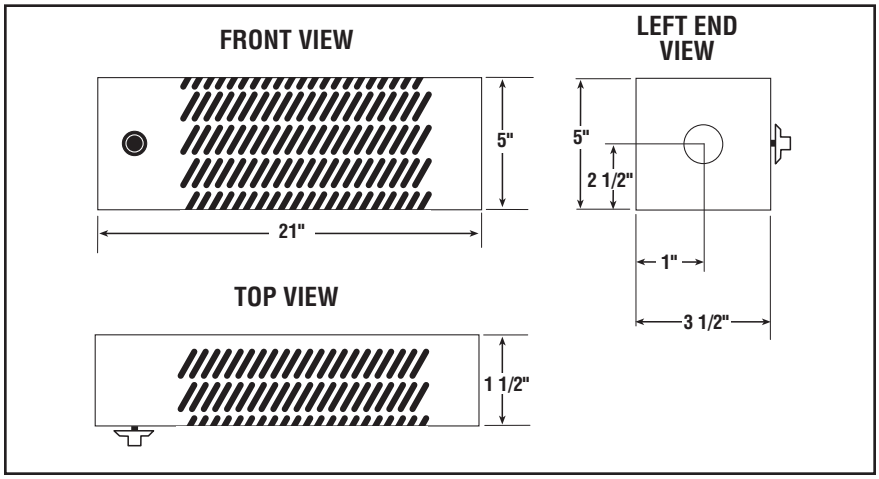

FILE #21609

SELECTION CHART

CATALOG NO.	VOLTS	WATTS	BTU/HR	AMPS
WHT-500	120	500	1708	4.2
	240*	500	1708	2.1
	208	375	1284	1.8

* As shipped. Can be field rewired for 120V.